# Maximizing Vehicle Weight Reduction with High Density Power DC-DC Modules

July 4, 2024

Gregory Green

Director of Automotive Marketing

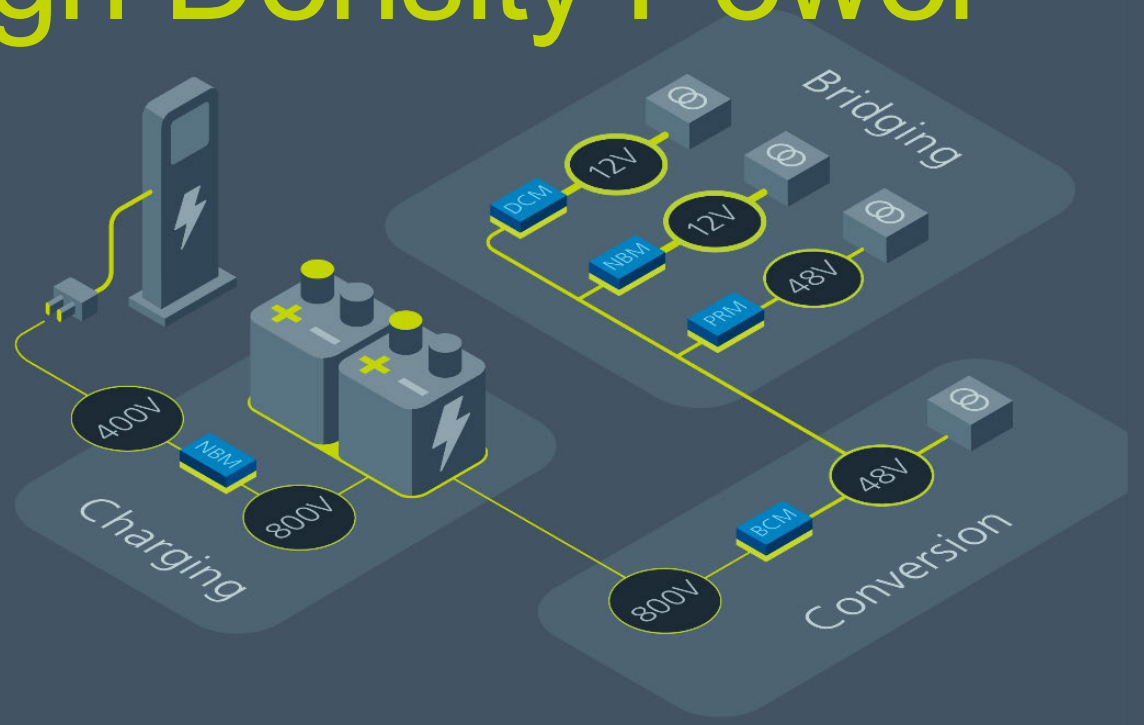


©2024 Vicor

# EVs have a weight problem

## Increased weight decreases operating range



Tesla Model 3 is 15% heavier than the average mid-size sedan (194kg)



GM Silverado EV is 1,300-1,800 kgs heavier than the non-electric version



Adding 450kg extra to a vehicle's weight increases accident fatality risk by ~47%

The National Bureau of Economic Research



Excess EV weight is stressing parking deck structures and increasing road wear


VICOR CONFIDENTIAL ©2024 Vicor

# Vicor Overview - Innovating for over 40 years in Power Conversion

- Established in 1981 in Andover, Massachusetts
- 2023 Sales of $400M
- Solving the toughest problems
- Modules with 5x power density
- Highest power density for over 40 years
- Able to achieve up to a 30-50% reduction in weight and size

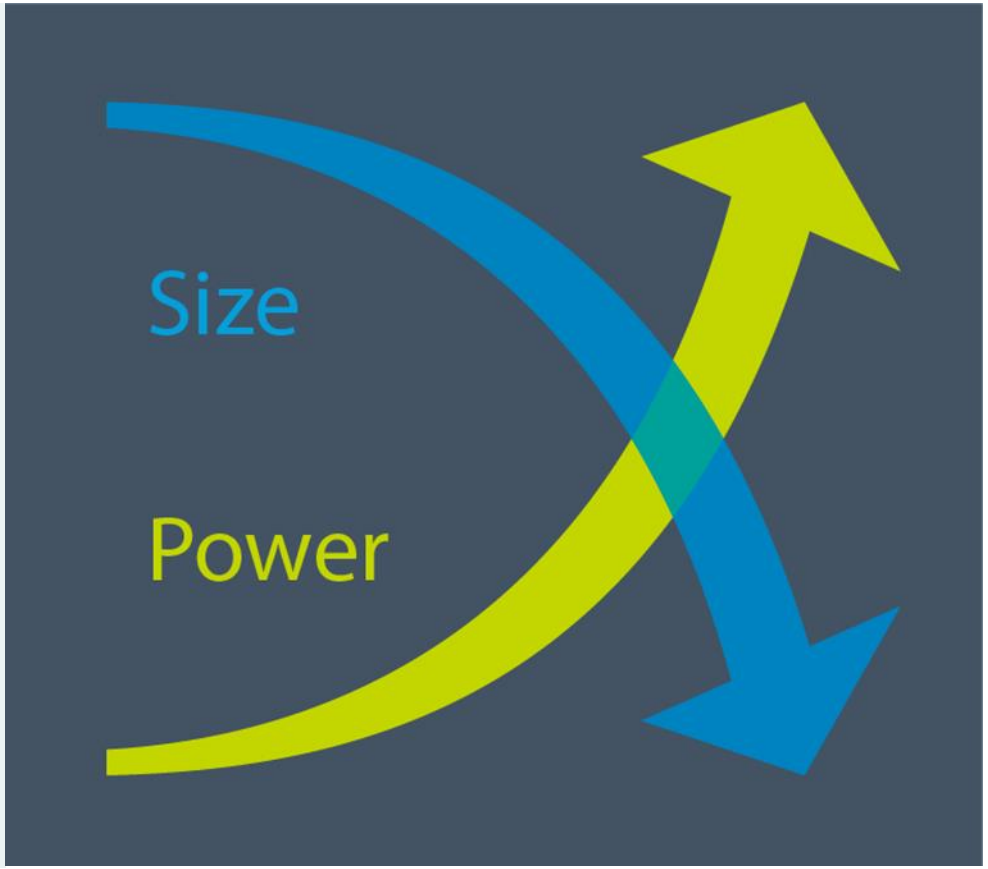



VICOR CONFIDENTIAL ©2024 Vicor

# Vicor Technology for Automotive DC-DC Voltage Conversion

©2024 Vicor

# Enabling technology – Vicor power modules

## Highly integrated DC-DC converters

Extended variety of input and output voltages available

Isolation, regulation, conversion and transformation integrated in different combinations

Hundreds of components are tightly arranged within a miniature footprint

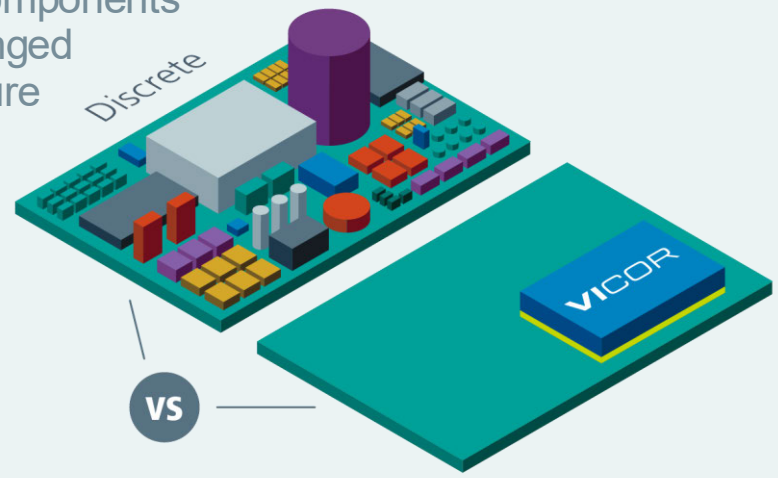


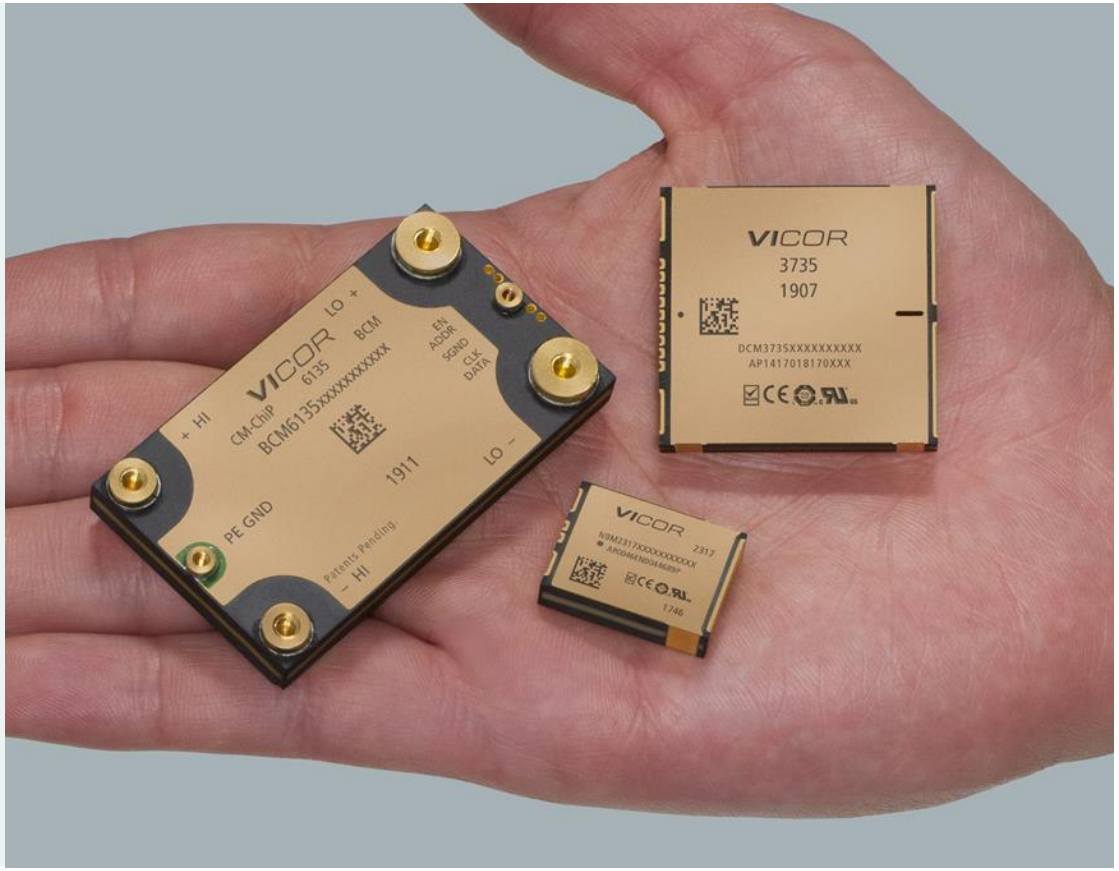

# Sine Amplitude Converter technology/topology

- Sine Amplitude Converter topology:
  - Zero Voltage Switching
  - Zero Current Switching
- Fixed Ratio Conversion:
  - Divide/multiply the voltage/current
- Extremely fast transient current capability
- Ideal transformer behavior
- No inductor usage
- Not dependent on internal energy storage
- Capacitance multiplication

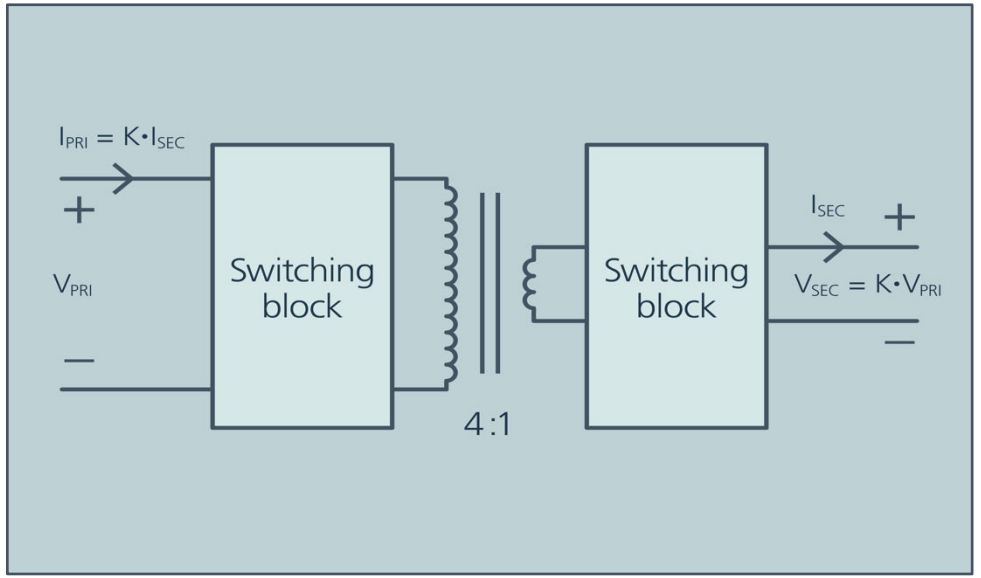


| K factor | 1/16 | 1/4 | 2/1 | 4/1 |
|---|---|---|---|---|
| $V_{PRI}$ | 800 | 48 | 800 | 12 |
| $V_{SEC}$ | 48 | 12 | 400 | 48 |
| $I_{PRI}$ | 1 | 1 | 2 | 4 |
| $I_{SEC}$ | 16 | 4 | 1 | 1 |


VICOR CONFIDENTIAL ©2024 Vicor

# Automotive Product Line Modules

| Model | PPAP Date | Application | Peak Power |
|---|---|---|---|
| **BCM6135 A06** | Submitted | 800V <–> 48V Unregulated | 2.5 kW |
| **DCM3735 AN2** | Complete | 48V –> 12V Regulated | 2.0 kW |
| **PRM3735S AB4** | Complete | 48V <–> 48V Regulated | 2.5 kW |
| **NBM9280 A02** | 3Q 2025 | 800V <-> 400V Unregulated | 37.5 kW |

These products can be applied in over 300 configurations
to address specific power distribution needs


VICOR CONFIDENTIAL ©2024 Vicor

# Benefits of Vicor Miniaturized DC-DC Converters

Dave McChesney, Strategic Account Manager

 ©2024 Vicor 

# Reducing xEV Weight Requires a Holistic PDN Architecture Approach

- Downsizing DC-DC Converters
- Integrating smaller DC-DC into the Battery Housing
- 48V Primary Vehicle Electrical Bus
- 48V Zonal Architecture
- Eliminate LV Batteries
- Downsizing Charge Compatibility Converters (150 kW 800 ↔ 400V)

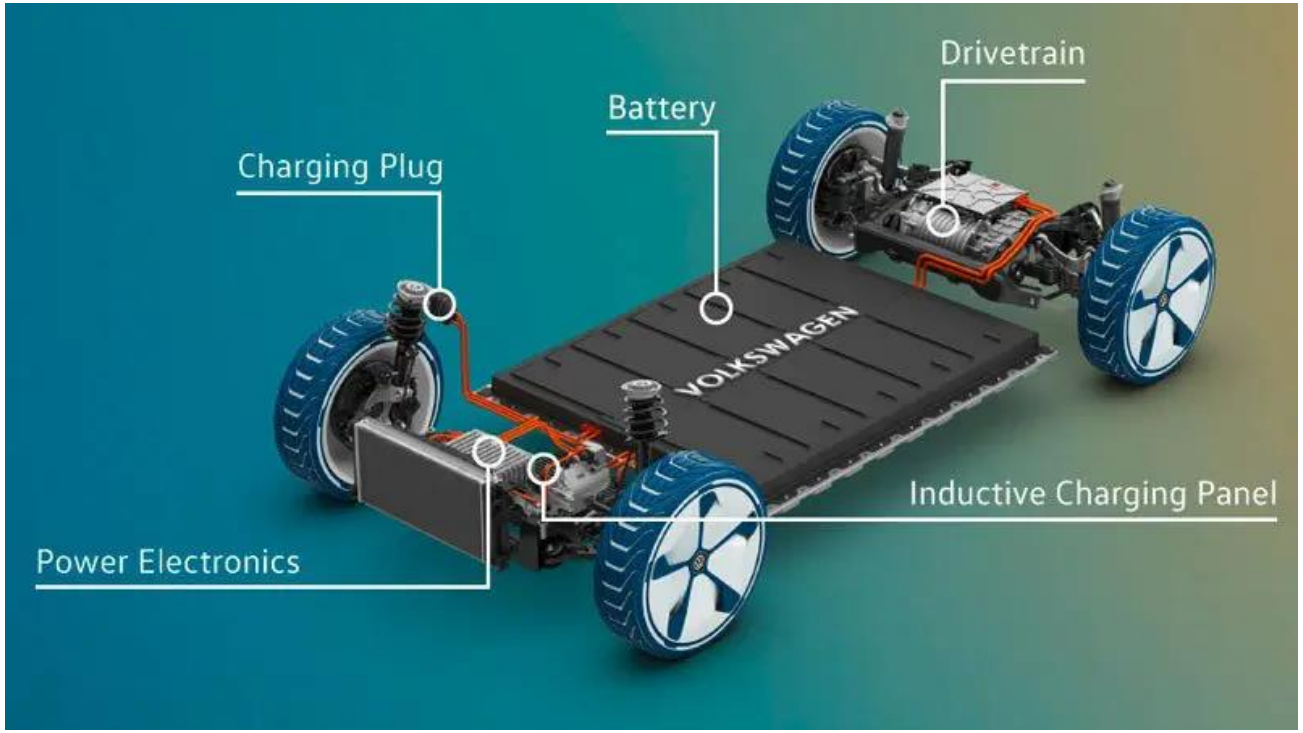

# Downsizing the High Voltage to Low Voltage


VICOR CONFIDENTIAL ©2024 Vicor

# HV to LV 4kW system




2 – BCM6135

## Flexible and scalable building blocks


FOR MAGNA INTERNAL USE ONLY ©2024 Vicor

# 4kW DC-DC 800/48/12V Prototype

Isolated and Regulated

2 output Bus – each 2kW regulated

Mass = 1.5 kg

Envelope = 1.1 L

CAN Bus

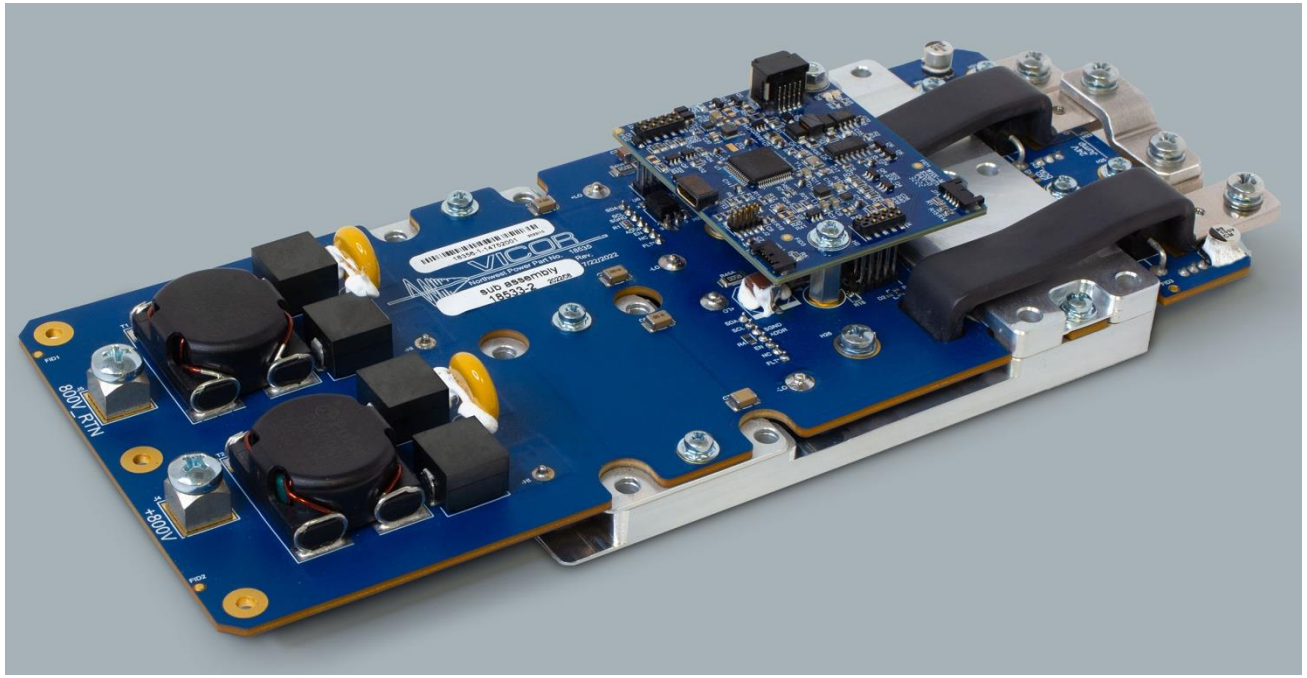


Designed and developed with a

N. American Tier 1


©2024 Vicor

# 3 – 4x Improvement in Power Density

| | Vicor Concept | Tesla Model X | Vitesco 4th Generation |
|---|---|---|---|
| **Pout W (Output Power)** | 4000 @ 13.8V | 2300 @ 12 V | 3500 @ 14.5V |
| **Output Current A** | 290 | 193 | 240 |
| **Weight kg** | **1.4** | **2.1** | **2.6** |
| **Footprint $mm^2$** | **24500** | **30520** | **50000** |
| **Volume L (w/o connectors)** | **1.1L (245 x 100 x 40)** | **1.8L (140 x 218 x 60)** | **2.5 L (250 x 200 x 50)** |
| **Efficiency** | **95%** | **93% Estimate** | **96% Estimate** |
| **Power Density kW/liter** | **3.63** | **1.3** | **1.34** |
| **Gravimetric Power Density kW/kg** | **2.85** | **1.1** | **1.5** |

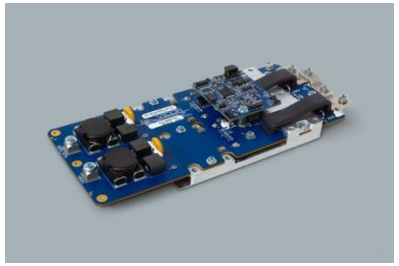



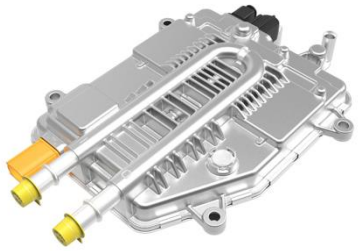


©2024 Vicor

# Architecture: Centralized vs Zonal

## Centralized

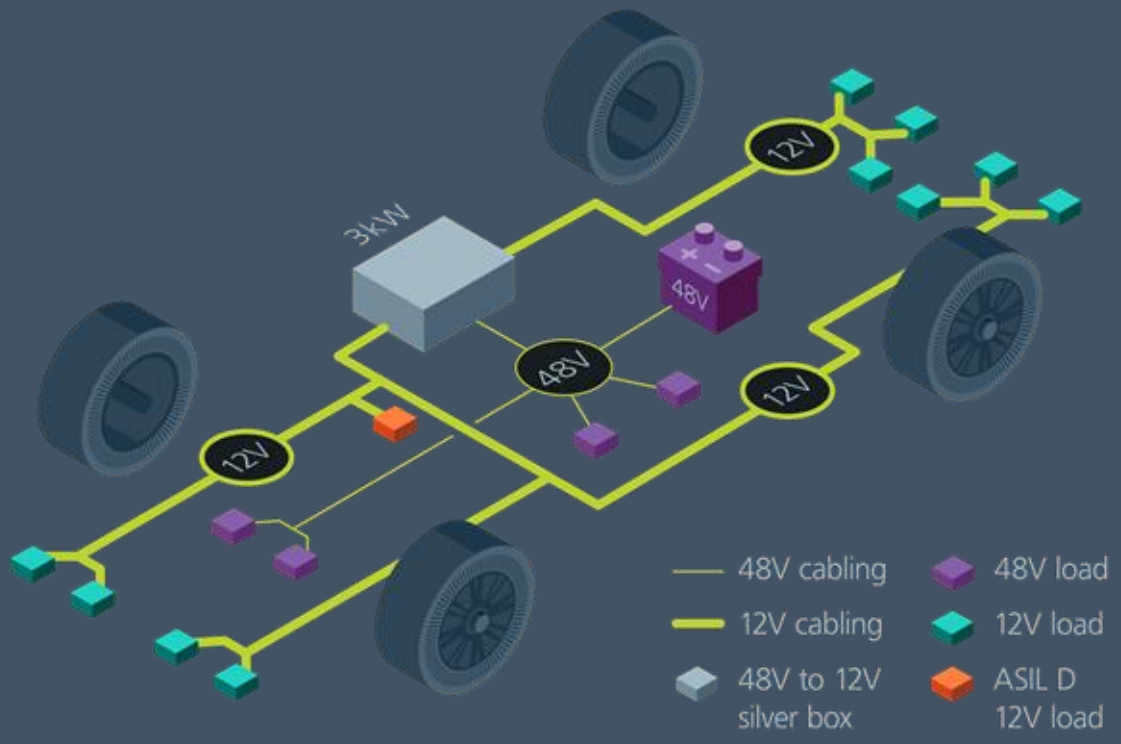


## Zonal

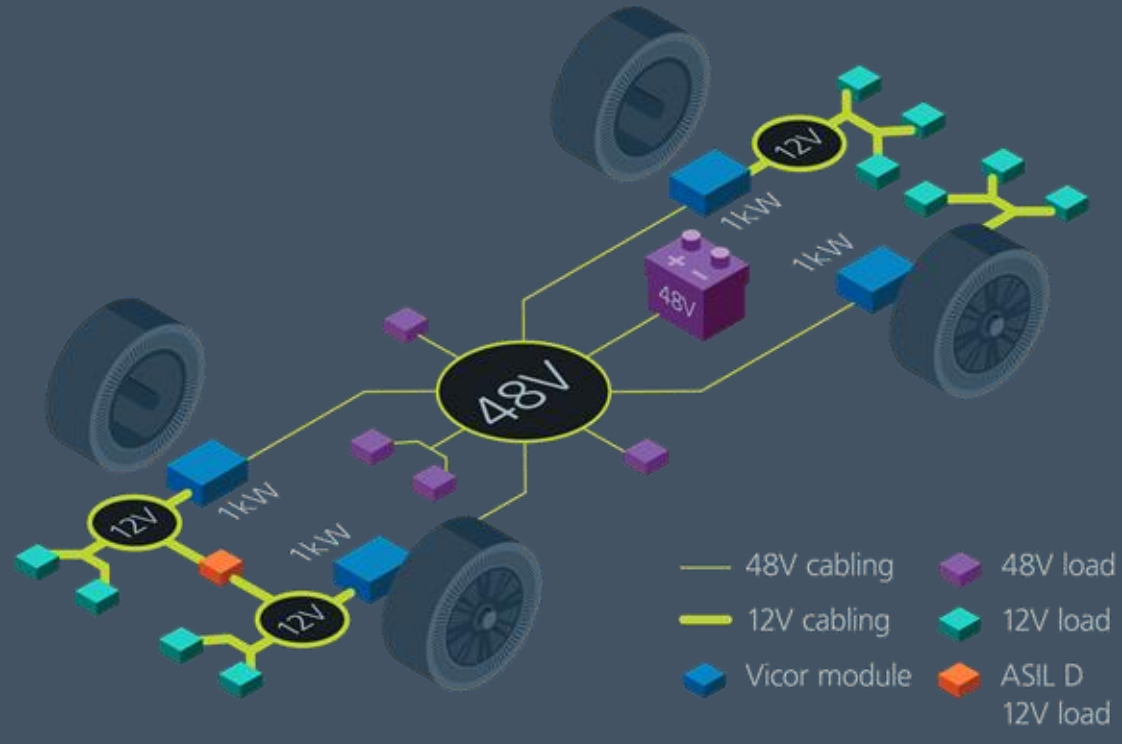



FOR MAGNA INTERNAL USE ONLY ©2024 Vicor

# Vehicle Level Cost and Mass Reduction Enabled through Vicor Modules

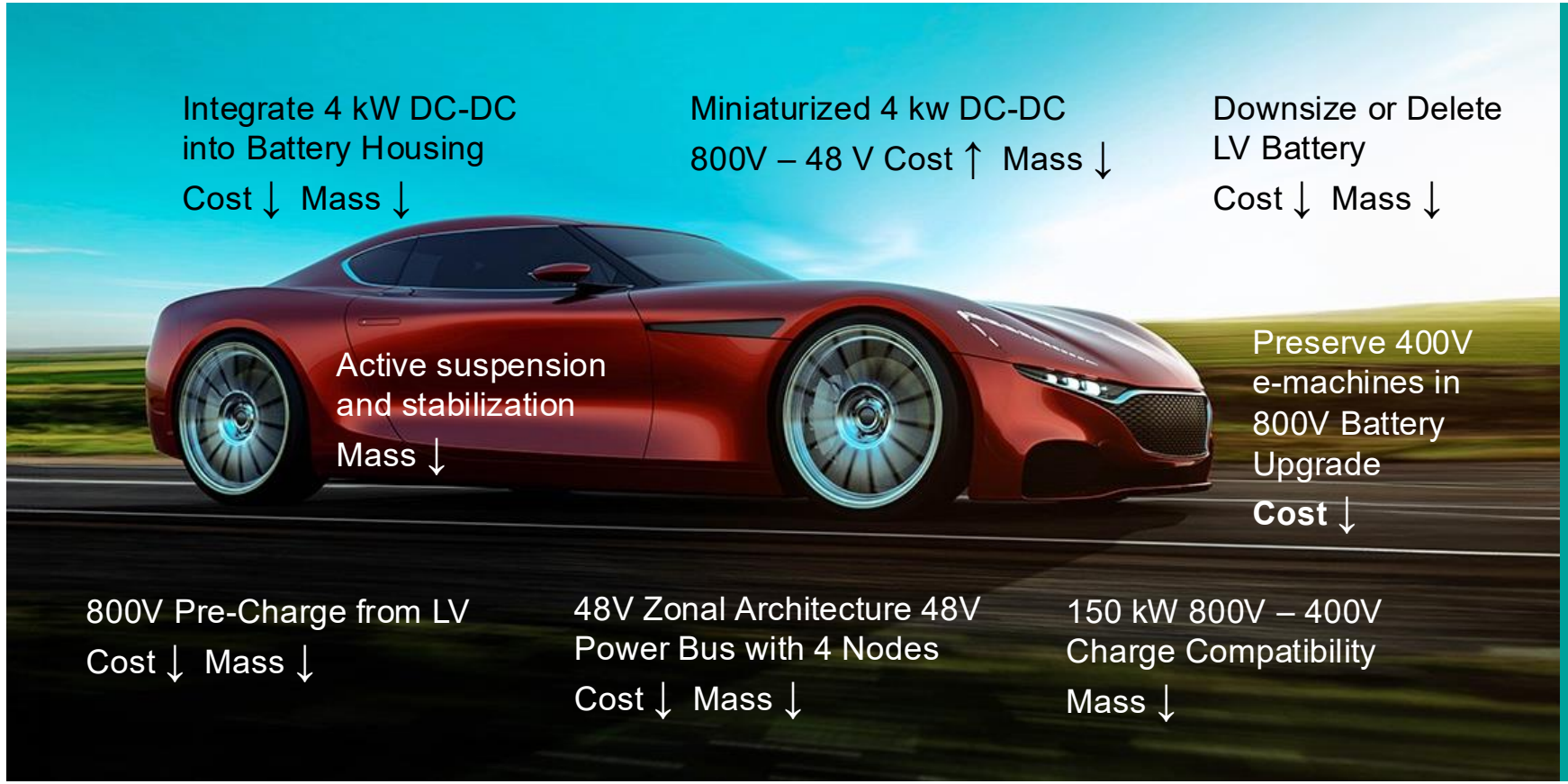


Total Vehicle Cost Reduction
$75 -$100

Total Vehicle Mass Reduction
20 – 25kg


©2024 Vicor